Computers and Chemical Engineering Vol. 6, No. 3, pp. 231–244, 1982
Printed in Great Britain.

0098–1354/82/030231–14$03.00/0
© 1982 Pergamon Press Ltd.

GEAR'S PROCEDURE FOR THE SIMULTANEOUS SOLUTION OF DIFFERENTIAL AND ALGEBRAIC EQUATIONS WITH APPLICATION TO UNSTEADY STATE DISTILLATION PROBLEMS

STEVEN E. GALLUN
Exxon Chemical Americas, Baytown, Texas, U.S.A.

and

CHARLES D. HOLLAND*
Texas A & M University, College Station, TX 77483, U.S.A.

(*Received* 28 *January* 1981; *received for publication* 22 *December* 1981)

Abstract—The dynamic equations modeling a sieve plate at unsteady state are developed. Gear's procedure for the simultaneous solution of systems of stiff differential and algebraic equations is presented and demonstrated for the solution of unsteady state distillation problems. It is shown that the basic stage model can be modified by the addition of one variable and one equation such that Gear's procedures are readily applied. The proposed model and solution procedure is contrasted to recently published procedures. Numerical results are given for the solution of a problem involving an extractive distillation column at unsteady state.

Scope—The large number of differential and algebraic equations required to describe the dynamic operation of a distillation column plus the fact that they do not appear in state variable form suggests the necessity for the reduction of the number of equations and variables and the restatement of the resulting expressions in state variable form. The manipulations required to express the equations in state variable form generally involve the time differentiation of the algebraic equations to obtain differential equations and the approximation of derivatives in the model equations by difference formula.

The procedures proposed in this paper were developed to eliminate the complexities and errors introduced when the basic stage model is manipulated to reduce dimensionality or to fit the form required by an integration technique. The dimensionality problem may be overcome by exploiting sparse matrix methods for matrix storage and factorization. The selected integration procedure, Gear's method, can be directly applied to the differential and algebraic equations of the basic model which totally eliminates the need for extensive manipulation of the stage equations.

Conclusions and Significance—Although a large number of stiff differential and algebraic equations are required to describe the dynamic operation of a distillation column, they may be solved in an efficient manner by use of Gear's numerical integration method. Although the differential equations are not in state variable form, these equations and the algebraic equations may be solved directly without reduction in number or restatement in state variable form. Through the use of the Nordsieck vector, simultaneous change in step size and integration order becomes an efficient process. The algorithm of Kubicek *et al.* (1976) and the sparse matrix techniques of Tewarson (1973) provide an efficient method to store and factor the large sparse Jacobian matrix generated by Gear's procedure.

To illustrate the application of the method, a column containing 48 plates in the service of separating a mixture of methanol, acetone, ethanol, and water was used. Correlations of Prausnitz and the Wilson equation were used to account for the deviation of the enthalpies and vapor-liquid equilibrium relationships from ideal solution behavior. The efficiency of the numerical-integration-process is reflected by the fact that the integration procedure required 170 sec. of AMDAHL 470 V/6 execution time to obtain the dynamic response for a period of 2 hr.

The procedures presented are directly applicable for the solution of all models consisting of mixed sets of differential and algebraic equations.

REVIEW OF RECENT UNSTEADY STATE DISTILLATION PROCEDURES

Several recent papers dealing with the dynamic simulation of distillation processes are of interest because they highlight problems and complexities that are easily eliminated or reduced by the procedures presented in this paper. Doukas and Luyben (1978) indicate that unrealistic model responses can occur if the energy balance differential equations are reduced to algebraic relationships under the assumption of fast energy equation

*Author to whom correspondence should be addressed.

dynamics. The energy balance and total material balance equations used by Doukas and Luyben are given by Eqs. (1.1) and (1.2).

Equation (1.3) results from the application of the chain rule and a simple substitution. The enthalpy derivative in Eq. (1.3) is then approximated using Eq. (1.4),

$$\frac{d(U_j\hat{h}_j)}{dt} = L_{j-1}\hat{h}_{j-1} - V_j\hat{H}_j - L_j\hat{h}_j + V_{j+1}\hat{H}_{j+1} \tag{1.1}$$

$$\dot{U}_j = L_{j-1} - V_j - L_j + V_{j+1} \tag{1.2}$$

$$U_j\dot{\hat{h}}_j = L_{j-1}(\hat{h}_{j-1} - \hat{h}_j) - V_j(\hat{H}_j - \hat{h}_j) + V_{j+1}(\hat{H}_{j+1} - \hat{h}_j) \tag{1.3}$$

$$\dot{\hat{h}}_j = \frac{(\hat{h}_j)^n - (\hat{h}_j)^{n-1}}{\Delta t} \tag{1.4}$$

where the superscripts refer to the integration step number. The approximation of the enthalpy time derivatives by Eq. (1.4) introduces a numerical approximation into the basic model equations. The model is no longer a separate entity consisting of differential and algebraic equations. The model has been tied to a particular numerical approximation which will ultimately determine the integration accuracy. Increasing the order of the overall integration procedure will not increase the accuracy obtained as long as Eq. (1.4) is imbedded in the system of equations being integrated.

Tung and Edgar (1979) developed a model for a laboratory column separating a binary mixture and compared simulation results to experimental steady state and dynamic response data. The basic stage model consisted of differential equations defining a total material balance, an energy balance, and a single component material balance. An algebraic equation defined holdup on each stage and relationships specific to binary systems were used to describe stream enthalpies and equilibrium relationships. The holdup was taken to be a function of the vapor and liquid flow rates as well as the physical properties. The holdup equation was converted to a differential equation by differentiating it with respect to time. However, in order to simplify their model, the time derivative of the vapor rate, $\dot{V}_j$, was set equal to zero.

Ballard *et al.* (1978) presented a distillation model formulated for solution by a semi-implicit Runge–Kutta method. In particular they propose the use of the second order semi-implicit Runge–Kutta algorithm that requires the evaluation of the system Jacobian matrix at the beginning of each time step and the solution of two sets of linear equations (derived from the Jacobian) during the step. The semi-implicit Runge–Kutta algorithm requires the system differential equations to be in state variable form, Ballard *et al.* (1978) choose the total liquid flow rates, L_j, and the liquid mole fractions, x_{ji}, to be the state variables. The basic dynamic distillation equations are then manipulated and reduced in number to achieve a state variable formulation. Several types of approximations are necessary. For example if the stage molar holdup is a function of total liquid and vapor rates it is necessary to use the approximations defined by Eqns. (1.5) and (1.6) in some of the basic model equations.

$$\dot{V}_j = \frac{V_j^n - V_j^{n-1}}{\Delta t} \tag{1.5}$$

$$\dot{L}_j = \frac{L_j^n - L_j^{n-1}}{\Delta t} \tag{1.6}$$

Ballard *et al.* (1978) use the stage energy and total material balance given by Eqs. (1.1) and (1.2). The basic component material balance is given by Eq. (1.7). In order to reduce Eq. (1.7) to state variable form, the derivative appearing in Eq. (1.7) is expanded by the chain rule and Eq. (1.2) is used to eliminate the time derivative of the holdup. Equation (1.8) is the result of these manipulations. Similarily Eq. (1.1) is expanded resulting in Eq. (1.3).

$$\frac{d}{dt}(U_jx_{ji}) = L_{j-1}x_{j-1,i} - L_jx_{ji} - V_jy_{ji} + V_{j+1}y_{j+1,i} \tag{1.7}$$

$$\dot{x}_{ji} = \frac{1}{U_j}(L_{j-1}(x_{j-1,i} - x_{ji}) - V_j(y_{ji} - x_{ji}) + V_{j+1}(y_{j+1,i} - x_{ji}) \tag{1.8}$$

Equation (1.3) must be further manipulated to eliminate the time derivative of stage liquid enthalpy. Ballard *et al.* (1978) expanded the liquid enthalpy by the chain rule and obtained Eq. (1.9). Equation (1.11) results from differentiating and rearranging the bubble point function defined by Eq. (1.10). Equation (1.10) is differentiated under the assumption that the equilibrium ratios are functions of temperature only.

$$\dot{\hat{h}}_j = \frac{\partial\hat{h}}{\partial T_j}\dot{T}_j + \sum_{i=1}^{c}\frac{\partial\hat{h}_j}{\partial x_{ji}}\dot{x}_{ji} \tag{1.9}$$

$$\sum_{i=1}^{c} K_{ji}x_{ji} = 1 \tag{1.10}$$

$$\dot{T}_j = -\frac{\sum_{i=1}^{c} K_{ji}\dot{x}_{ji}}{\sum_{i=1}^{c} x_{ji}\frac{\partial K_{ji}}{\partial T_j}}. \tag{1.11}$$

Proper combination of Eqs. (1.3), (1.8), (1.9) and (1.11) yield an algebraic equation relating the total liquid and vapor flow rates. Implicit in achieving this result is the assumption that the equilibrium ratios are functions of temperature only. The general case where the equilibrium ratios are functions of stage liquid and vapor compositions as well as temperature was not considered. At a minimum Eq. (1.11) will become much more complex if the dependency of the equilibrium ratios is enlarged. The procedure would be further complicated if the stage model equations were expanded to calculate the variation of stage pressure with time.

Ballard *et al.* (1978) achieved a state variable formulation limited by the assumptions described above. In the solution of the state variable model by the semi-implicit Runge–Kutta method further approximations were made in the calculation of the Jacobian matrix to ease the calculation burden and permit an easy solution of the various linear equations.

Prokopakis and Seider (1980) present preliminary results on a dynamic distillation modeling procedure closely related to the method of Ballard *et al.* (1978). Prokopakis and Seider (1980) essentially use the state variable equations derived by Ballard *et al.* (1978) but use an adaptive semi-implicit Runge–Kutta algorithm to integrate the equations. The algorithm is adaptive in the sense that the semi-implicit algorithm coefficients are calculated at each integration step to match the variation estimates of local eigenvalues.

SIMULTANEOUS SOLUTION OF STIFF DIFFERENTIAL AND ALGEBRAIC EQUATIONS

All the dynamic distillation procedures discussed in the previous section have resorted to difference approximations directly in the model equations or have ignored certain derivatives when necessary to force equations into a form suitable for a particular integration technique. These manipulations can be avoided by selection of integration techniques capable of the direct solution of systems consisting of both differential and algebraic equations. Two such integration techniques are Michelsen's (1976a, 1976b) semi-implicit Runge–Kutta method and the class of linear multistep methods derived from numerical differentiation formulas. Both procedures are suitable for solving stiff systems.

The semi-implicit Runge–Kutta method requires the analytical evaluation and factorization of the Jacobian matrix of the system of algebraic and differential equations at least once each time step. The general distillation problem may require thermodynamic and tray hydraulic functions that are computationally complex. The imposition of the additional burden of analytically evaluating the partial derivatives of these functions is a severe burden as many thermodynamic packages do not supply the required partial derivatives. For this reason the semi-implicit Runge–Kutta method was not chosen as the integration technique. The recent work of Weimer and Clough (1979) tends to support this decision.

Linear multistep methods derived from differentiation formulas are readily implemented for the simultaneous solution of systems of stiff differential and algebraic equations. These methods are implicit and in general require the solution of a set of nonlinear algebraic equations for each time step. The algebraic equations are generally solved by variations of the Newton–Raphson procedure. These methods thus do not require explicit and accurate evaluation of the Jacobian matrix at each time step. This is a significant advantage for general dynamic distillation problems relative to the semi-implicit Runge–Kutta method.

The linear multistep methods can be implemented in various forms. Hachtel *et al.* (1971) employed a backward finite difference formulation. Gear (1971b) implemented the linear multistep formulas using a technique due to Nordsieck (1962) in which approximations to derivatives at the current time step are saved rather than a history of previous integration variable values. The Gear formulation was selected as the basic procedure. This procedure, published by Gear (1971b) as a subroutine DIFSUB, was modified for simultaneous solution of differential and algebraic equations. The basis for simultaneous solution of differential-algebraic systems was discussed by Gear (1971c). Gear type codes, other than DIFSUB, are also available. Byrne *et al.* (1977) reviewed EPISODE and GEAR which are variations of the basic Gear procedure.

Standard practice in writing code to solve differential equations appears to be the assumption of pure differential systems in state variable form as defined by Eq. (2.1).

$$\dot{X} = f(X, t). \tag{2.1}$$

Equation (1.1) clearly illustrates that natural dynamic distillation model equations are not of state variable form. As will be shown, a dynamic distillation model consists of a system of mixed differential and algebraic equations. Gear type integration routines such as DIFSUB, GEAR, and EPISODE assume a pure differential system in the form of Eq. (2.1). Thus DIFSUB, GEAR, and EPISODE all require modification if they are to be used for the solution of mixed differential-algebraic systems. Gear's basic procedures as implemented in DIFSUB and the extensions required for the solution of differential-algebraic systems are discussed in a subsequent section.

BASIC EQUILIBRIUM STAGE MODEL OF A SINGLE SIEVE TRAY

Gallun (1979) proposed a model for distillation columns at unsteady state that is easily solved by Gear's (1971c) procedures for the solution of mixed systems of stiff differential and algebraic equations. The basic stage model consists of the usual material balances, energy balances, hydraulic relationships, equilibrium relationships, and equations that define stage holdups. The model differs from other models in that the equations are not manipulated or differentiated to obtain expressions involving derivatives of state variables. Further, low order difference approximations are not used to eliminate derivatives that are difficult to evaluate. The proposed model further exploits Gear's procedures by introducing an extra variable and algebraic equation for each stage. These additions permit the integration package to generate the derivatives required in the energy balance equation without the complexities introduced by application of the chain rule.

The basic model for a single plate is defined by Eqs. (3.1)–(3.7). Column internals are shown in Fig. 1. Component material balances and equilibrium relationships are defined by Eqs. (3.1) and (3.2). The equilibrium relationships are general and are of the form given by Prausnitz *et al.* (1967). Equation (3.3), which is adapted from Van Winkle (1967) to relate stage pressures within the column, defines the pressure drop between stages j and j-1 to be the sum of the dry tray pressure drop due to vapor from stage j passing through the holes in the sieve plate of stage j-1 and the pressure loss resulting from overcoming the head of the liquid held on stage j-1. The stage molar holdup is defined to be the sum of the moles of liquid held on the plate plus the moles of liquid in the downcomer. Equation (3.4) relates the stage molar holdup to the stage volumetric holdup, $\mathcal{V}_j$, which is an explicit function of various integration variables defined in Appendix B. Thus $\mathcal{V}_j$ is not an integration variable but a function of integration variables in the same sense that the equilibrium ratios and activity coefficients of Eq. (3.2) are functions of various integration variables and not integration variables themselves. Equation (3.5) is a force balance relating pressure drop to the height of clear liquid in the downcomer, the pressure drop in flowing under the downcomer from stage j to $j+1$, and the height of liquid on stage $j+1$. The stage energy balance is given by Eqs. (3.6) and (3.7). The addition of the variable E_j and Eq. (3.7) allows the numerical package to approximate $\dot{E}_j$ with the same order of accuracy as all other derivatives without expanding $\mathrm{d}\sum_{i=1}^{c}(u_{ji}\hat{h}_{ji})/\mathrm{d}t$ by the chain rule. Further the need to introduce low order approximations such as that defined by Eq. (1.4) is eliminated. The advantages of introducing E_j and Eq. (3.7) are further discussed in Appendix A. It should be noted that Eq. (3.6) assumes that each stage operates

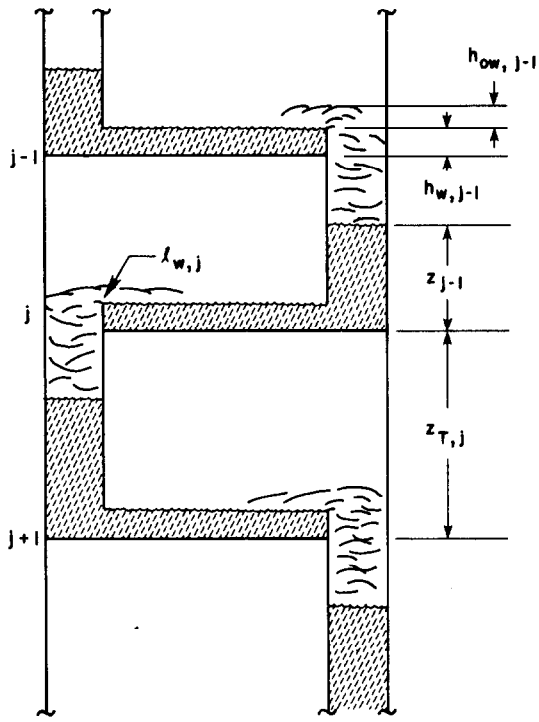

Fig. 1. Sketch of tower internals.

adiabatically. Equation (3.6) will have an additional term if this assumption is relaxed. The presence of the additional term will not alter the procedures discussed in this paper.

$$0 = F_j X_{ji} + v_{j+1,i} - v_{ji} + \frac{L_{j-1} u_{j-1,i}}{\sum_{k=1}^{c} u_{j-1,k}} - \frac{L_j u_{ji}}{\sum_{k=1}^{c} u_{jk}} - \dot{u}_{ji} \tag{3.1}$$

$$0 = \gamma_{ji}^{V} \left[\frac{v_{ji}}{\sum_{k=1}^{c} v_{jk}} \right] - \gamma_{ji}^{L} K_{ji} \left[\frac{u_{ji}}{\sum_{k=1}^{c} u_{jk}} \right] \tag{3.2}$$

$$0 = [P_j - P_{j-1}] - [h_{o,j-1} + h_{L,j-1}] \rho_{j-1}^{L} \zeta \tag{3.3}$$

$$0 = \sum_{i=1}^{c} u_{ji} - \bar{\rho}_j^{L} \mathscr{V}_j \tag{3.4}$$

$$0 = P_j - P_{j+1} + \zeta[12 Z_j - h_{dc,j} \rho_j^{L} - h_{L,j+1} \rho_{j+1}^{L}] \tag{3.5}$$

$$0 = F_j H_j + \frac{L_{j-1} \sum_{i=1}^{c} u_{j-1,i} h_{j-1,i}}{\sum_{i=1}^{c} u_{j-1,i}} - \frac{L_j \sum_{i=1}^{c} u_{ji} h_{ji}}{\sum_{i=1}^{c} u_{ji}} + \sum_{i=1}^{c} v_{j+1,i} \hat{H}_{j+1,i} - \sum_{i=1}^{c} v_{ji} \hat{H}_{ji} - \dot{E}_j \tag{3.6}$$

$$0 = \sum_{i=1}^{c} (u_{ji} \hat{h}_{ji}) - E_j. \tag{3.7}$$

Equations (3.1)–(3.7) represent $2c+5$ relationships required to model a single sieve plate as an equilibrium stage. The $2c+5$ stage variables are $\{u_{ji}\} i = 1, 2, \ldots, c$, $\{v_{ji}\} i = 1, 2, \ldots, c$, T_j, P_j, L_j, Z_j, and E_j. The various thermodynamic and hydraulic functions appearing in Eqs. (3.1)–(3,7) are considered to be explicit functions of the various stage variables. The equations defining some of these functions are given in Appendix B. Gallun (1979) gives a complete set of equations to define all the thermodynamic and hydraulic functions appearing in Eqs. (3.1)–(3.7).

GEAR'S METHOD FOR THE INTEGRATION OF SYSTEMS OF ALGEBRAIC AND ORDINARY DIFFERENTIAL EQUATIONS

The solution of systems of equations involving both algebraic and stiff ordinary differential equations has received considerable attention in the literature over the past 20 years. Starting in the late nineteen sixties, Gear published a series of articles (1967), (1971a), (1971c), and a book (1971b) pulling together the current technology for the solution of systems of stiff differential and algebraic equations. Although the development of Gear's method, a multistep numerical algorithm is tedious, the final result is relatively simple and easy to apply. First the equations of Gear's method for stiff differential equations are presented, and then Gear's method for a system of algebraic and differential equations is shown to be a simple extension of these equations.

Suppose that it is desired to solve the first order ordinary differential equation given by Eq. (4.1) using the multistep formula defined by Eq. (4.2). We assume that the required previous values are known and that the step size, h, is constant.

$$\dot{X} = f(X) \tag{4.1}$$

$$X_n = \sum_{i=1}^{k} \alpha_i X_{n-i} + \beta_0 h f(X_n). \tag{4.2}$$

The coefficients $\{\alpha_i\}$ and β_0 are determined such that Eq. (4.2) will be exact if the solution of Eq. (4.1) is a polynomal of degree k or less. Henrici (1962) indicates that stability considerations limit k in Eqs. (4.2) to 6.

Equation (4.2) is in general a nonlinear equation in X_n that will be iterated to convergence. The procedure used is Newton–Raphson. It is well known that the rate of convergence of the Newton–Raphson procedure is a function of the inital value used in starting the iterative procedure. Gear (1971b) predicts the initial value using Eq. (4.3) where again the coefficients are chosen to be exact for polynomials of degree k or less.

$$\tilde{X}_n = \sum_{i=1}^{k} \bar{\alpha}_i X_{n-i} + \bar{\beta}_1 h \dot{X}_{n-1} \tag{4.3}$$

It should be noted that since Eq. (4.2) is iterated to convergence, Eq. (4.3) only influences the rate of convergence and not the final value of X_n. Equations (4.2) and (4.3) can be put into a useful form if Eq. (4.3) is added to Eq. (4.2) and the resulting equation rearranged. The result of this operation is given by Eq. (4.4). The predicted value of the derivative at the next step is defined by Eq. (4.5).

$$X_n = \tilde{X}_n - \beta_0 \left[\sum_{i=1}^{k} \left(\frac{\bar{\alpha}_i - \alpha_i}{\beta_0} \right) X_{n-i} + \frac{\bar{\beta}_i}{\beta_0} h \dot{X}_{n-1} - h \dot{X}_n \right] \tag{4.4}$$

$$h \dot{\tilde{X}}_n = \frac{\bar{\beta}_1}{\beta_0} h \dot{X}_{n-1} + \sum_{i=1}^{k} \frac{(\bar{\alpha}_i - \alpha_i)}{\beta_0} X_{n-i} \tag{4.5}$$

Equation (4.5) can be substituted into Eq. (4.4) resulting in Eq. (4.6). The scalar, b, is defined by the identity given in Eq. (4.7) and the manipulations given by Eqs. (4.8) and (4.9).

$$X_n = \tilde{X}_n + \beta_0(h\dot{X}_n - h\dot{\tilde{X}}_n) \tag{4.6}$$

$$h\dot{X}_n = hf(X_n) \tag{4.7}$$

$$h\dot{X}_n = h\dot{\tilde{X}}_n + (hf(X_n) - h\dot{\tilde{X}}_n) \tag{4.8}$$

$$h\dot{X}_n = h\dot{\tilde{X}}_n + b \tag{4.9}$$

$$X_n = \tilde{X}_n + \beta_0 b. \tag{4.10}$$

Equation (4.10) results if the definition of b implied by Eqs. (4.8) and (4.9) is used in Eq. (4.6). The scalar b is chosen such that Eq. (4.11) is satisfied as required by the identity of Eq. (4.7).

$$h\dot{\tilde{X}}_n + b - hf(\tilde{X}_n + \beta_0 b) = 0. \tag{4.11}$$

Equation (4.11) is in general a nonlinear equation in b. Let Eq. (4.11) define the function $G(b)$. After the prediction step, the Newton–Raphson procedure is used to find b such that $G(b)$ is zero. The required derivative of $G(b)$ with respect to b, for the Newton–Raphson procedure, is given by Eq. (4.12).

$$\frac{\partial G(b)}{\partial b} = 1 - h\beta_0 \frac{\partial f}{\partial X}\bigg|_{\tilde{X}_n + \beta_0 b} \tag{4.12}$$

The vectors $\mathbf{W}_n$ and $\tilde{\mathbf{W}}_n$ as defined by Eq. (4.13) and (4.14) make it possible to write the prediction and correction step in matrix notation. The prediction step is given by Eq. (4.15) and the correction step by Eq. (4.16). The vector $\mathbf{C}$ is defined by Eq. (4.17) and the matrix $\mathbf{B}$ is shown for $k = 3$.

$$\mathbf{W}_n = [X_n, h\dot{X}_n, X_{n-1}, \ldots, X_{n-k+1}]^T \tag{4.13}$$

$$\tilde{\mathbf{W}}_n = [\tilde{X}_n, h\dot{\tilde{X}}_n, X_{n-1}, \ldots, X_{n-k+1}]^T \tag{4.14}$$

$$\tilde{\mathbf{W}}_n = \mathbf{B}\mathbf{W}_{n-1} \tag{4.15}$$

$$\mathbf{W}_n = \mathbf{W}_n + b\mathbf{C} \tag{4.16}$$

$$\mathbf{C} = [\beta_0, 1, 0, \ldots, 0]^T \tag{4.17}$$

$$\mathbf{B} = \begin{bmatrix} \bar{\alpha} & \bar{\beta}_1 & \bar{\alpha}_2 & \bar{\alpha}_3 \\ \dfrac{\bar{\alpha}_1 - \alpha_1}{\beta_0} & \dfrac{\bar{\beta}_1}{\beta_0} & \dfrac{\bar{\alpha}_2 - \alpha_2}{\beta_0} & \dfrac{\bar{\alpha}_3 - \alpha_3}{\beta_0} \\ 1 & 0 & 0 & 0 \\ 0 & 0 & 1 & 0 \end{bmatrix} \tag{4.18}$$

Nordsieck (1962) suggested that the vector, $\mathbf{Z}_n$, defined by Eq. (4.19) be carried rather than the $\mathbf{W}_n$ vector defined by Eq. (4.13). Nordsieck (1962) showed that there exists a unique transformation matrix $\mathbf{T}$, relating $\mathbf{Z}_n$ to $\mathbf{W}_n$ for each k. The transformation matrix is exact for polynomials of degree k.

$$\mathbf{Z}_n = \left[X_n, h\dot{X}_n, \frac{h^2X^{(2)}}{2!}, \frac{h^3X^{(3)}}{3!}, \ldots, \frac{h^kX^{(k)}}{k!}\right]^T \tag{4.19}$$

If $\tilde{\mathbf{Z}}_n$ is the predicted value of $\mathbf{Z}_n$ then Eqs. (4.15) and (4.16) become the following using Nordsieck vectors.

$$\tilde{\mathbf{Z}}_n = \mathbf{T}\tilde{\mathbf{W}}_n = \mathbf{TBW}_{n-1} = \mathbf{TBT}^{-1}\mathbf{Z}_{n-1} \tag{4.20}$$

$$\tilde{\mathbf{Z}}_n = \mathbf{D}\mathbf{Z}_{n-1} \tag{4.21}$$

$$\mathbf{D} = \mathbf{TBT}^{-1} \tag{4.22}$$

$$\mathbf{Z}_n = \mathbf{T}\mathbf{W}_n = \mathbf{T}(\tilde{\mathbf{W}}_n + b\mathbf{C}) \tag{4.23}$$

$$\mathbf{Z}_n = \tilde{\mathbf{Z}}_n + b\mathbf{L} \tag{4.24}$$

$$\mathbf{L} = \mathbf{TC}. \tag{4.25}$$

The matrix $\mathbf{D}$ is the Pascal triangle matrix. Gear (1971b) shows that the matrix multiplication implied by Eq. (4.21) can be carried out by successive additions resulting in a considerable savings of computational effort on large problems. Chua and Lin (1975) present a proof due to others showing that for all k the prediction matrix $\mathbf{D}$ will always be of the Pascal form. Since the first two components of $\mathbf{Z}_n$ and $\mathbf{W}_n$ are identical, the iterative process required for the solution of Eq. (4.11) remains unchanged. Since only the first two components of $\mathbf{Z}_n$ enter into the solution of Eq. (4.11), the successive corrections obtained in the Newton–Raphson procedure can be accumulated and applied to the remaining terms in $\mathbf{Z}_n$ at convergence. The $\mathbf{L}$ vectors for various k are given in Table 1 which has been taken from Gear (1971b). Gear (1971c) extended the above procedure for the simultaneous solution of mixed systems of differential and algebraic equations as follows.

Suppose it is desired to solve Eq. (4.26) for u_n at $t = t_n$ and that the equation has previously been solved at t_{n-i}, $i = 1, 2, \ldots, k+1$. In general, Eq. (4.26) will be nonlinear in u and thus require iterative solution. Let $\tilde{u}_n$ be the initial value used in the iterative procedure as calculated from Eq. (4.27). The $\{\eta_i\}$ are chosen such that the prediction will be exact if $u(t)$ is a polynomial in t of degree less than or equal to k.

$$g(u, t) = 0 \tag{4.26}$$

$$\tilde{u}_n = \sum_{i=1}^{k+1} \eta_i u_{n-i}. \tag{4.27}$$

Let Eqs. (4.28) and (4.29) define the vectors $\mathbf{W}_n$ and $\tilde{\mathbf{W}}_n$ respectively. The prediction step can then be written in matrix form as given by Eq. (4.30). The matrix $\mathbf{E}$ is shown for $k = 3$. The iterative procedure can now be written as Eqs. (4.32) and (4.33) using the scalar e and the coefficient, β_0, defined in Table 1. The scalar e is chosen to satisfy Eq. (4.34)

$$\mathbf{W}_n = [u_n, u_{n-1}, \ldots, u_{n-k}]^T \tag{4.28}$$

$$\tilde{\mathbf{W}}_n = [\tilde{u}_n, u_{n-1}, \ldots, u_{n-k}]^T \tag{4.29}$$

$$\tilde{\mathbf{W}} = \mathbf{E}\mathbf{W}_{n-1} \tag{4.30}$$

$$\mathbf{E} = \begin{bmatrix} \eta_1 & \eta_2 & \eta_3 & \eta_4 \\ 1 & 0 & 0 & 0 \\ 0 & 1 & 0 & 0 \\ 0 & 0 & 1 & 0 \end{bmatrix} \tag{4.31}$$

$$\mathbf{W}_n = \tilde{\mathbf{W}}_n + e\mathbf{M} \tag{4.32}$$

$$\mathbf{M} = [\beta_0, 0, 0, 0, \ldots, 0]^T \tag{4.33}$$

$$g(\tilde{u}_n + \beta_0 e, t_n) = 0. \tag{4.34}$$

The ultimate goal of this analysis is to outline a procedure to solve simultaneous stiff ordinary differential and algebraic equations. If the variables that have derivatives are carried as Nordsieck vectors, it would be

Table 1. Elements of the vector **L** and values of β_0 for Gear's algorithms of order k*

k	1	2	3	4	5	6
L(1)	1	$\frac{2}{3}$	$\frac{6}{11}$	$\frac{24}{50}$	$\frac{120}{274}$	$\frac{720}{1764}$
L(2)	1	$\frac{3}{3}$	$\frac{11}{11}$	$\frac{50}{50}$	$\frac{274}{274}$	$\frac{1764}{1764}$
L(3)		$\frac{1}{3}$	$\frac{6}{11}$	$\frac{35}{50}$	$\frac{225}{274}$	$\frac{1624}{1764}$
L(4)			$\frac{6}{11}$	$\frac{10}{50}$	$\frac{85}{274}$	$\frac{735}{1764}$
L(5)				$\frac{1}{50}$	$\frac{15}{274}$	$\frac{175}{1764}$
L(6)					$\frac{1}{274}$	$\frac{21}{1764}$
L(7)						$\frac{1}{1764}$

*Note β_0 corresponds to $L(1)$.

desirable to carry algebraic variables (variables whose derivatives never appear in the system equations) in the same manner. It is easily verified that if $u(t)$ is a polynomial of degree k or less, then there exists a nonsingular transitions matrix, **Q**, that exactly relates the $\mathbf{Z}_n$ vector of Eq. (4.19) and $\mathbf{W}_n$ defined by Eq. (4.28). The predictor and corrector steps given by Eqs. (4.30)–(4.34) can now be rewritten in terms of the Nordsieck vector.

$$\tilde{\mathbf{Z}}_n = \mathbf{Q}\tilde{\mathbf{W}}_n = \mathbf{QEW}_{n-1} = \mathbf{QEQ}^{-1}\mathbf{Z}_{n-1} \tag{4.35}$$

$$\tilde{\mathbf{Z}}_n = \mathbf{DZ}_{n-1} \tag{4.36}$$

$$\mathbf{D} = \mathbf{QEQ}^{-1} \tag{4.37}$$

$$\mathbf{Z}_n = \mathbf{QW}_n = \mathbf{Q}(\tilde{\mathbf{W}}_n + e\mathbf{M}) \tag{4.38}$$

$$\mathbf{Z}_n = \tilde{\mathbf{Z}}_n + e\mathbf{L} \tag{4.39}$$

$$\mathbf{L} = \mathbf{QM}. \tag{4.40}$$

D in Eq. (4.36) is the Pascal triangle matrix and identical to the **D** matrix of Eq. (4.21). Similarly the **L** vectors in Eqs. (4.25) and (4.40) are identical. Thus the same basic method can be applied to both differential and algebraic equations.

The procedures that have been described for individual differential and algebraic equations are easily extended for mixed differential-algebraic systems. Let **f** and **g** be vectors of differential and algebraic equations defined by Eqs. (4.41) and (4.42). Let t be the independent variable and **X** and **u** vectors of dependent variables of appropriate dimension.

$$\mathbf{f}(\dot{\mathbf{X}}, \mathbf{X}, \mathbf{u}, t) = 0 \tag{4.41}$$

$$\mathbf{g}(\mathbf{X}, \mathbf{u}, t) = 0. \tag{4.42}$$

The procedures outlined for the solution of a single differential or algebraic equation using Nordsieck vectors are easily applied for the solution of Eqs. (4.41) and (4.42). When a kth order method is being used, it is necessary to carry a $k+1$ dimension Nordsieck vector for each element of **X** and **u**. The procedure outlined is then applied in parallel for each dependent variable. If **b** and **e** are the vector corrections for the differential and algebraic variables respectively, then Eqs. (4.11) and (4.34) can be rewritten as given by Eqs. (4.43) and (4.44). Equation (4.11) was derived assuming that the differential equation was written in the form of Eq. (4.1). It is one of the benefits of Gear's method (1971b) that it is not required to write the differential equations in state variable form.

$$\mathbf{f}(h\dot{\tilde{\mathbf{X}}}_n + \mathbf{b}, \tilde{\mathbf{X}}_n + \beta_0\mathbf{b}, \tilde{\mathbf{u}}_n + \beta_0\mathbf{e}, t_n) = 0 \tag{4.43}$$

$$\mathbf{g}(\tilde{\mathbf{X}}_n + \beta_0\mathbf{b}, \tilde{\mathbf{u}}_n + \beta_0\mathbf{e}, t_n) = 0. \tag{4.44}$$

Gear (1971b) shows that the local truncation error of the method defined by Eq. (4.2) is given by Eq. (4.45) assuming the solution to Eq. (4.1) has $(k+2)$ continuous derivatives.

$$\epsilon_T = \frac{h^{k+1}X^{(k+1)}}{(k+1)} + O(h^{k+2}). \tag{4.45}$$

Gear (1971b) recommends that at each step of the integration the absolute value of the truncation error be held below some value. Since Nordsieck vectors are used to implement the method, approximations to the $(k+1)$st order are readily obtained by differencing the last component of the $\mathbf{Z}_n$ vector given by Eq. (4.19). $\mathbf{Z}_n$ will have $(k+1)$ components when a kth order method is being implemented. Since **D** is the pascal triangle matrix and since $\tilde{\mathbf{Z}}_n$ is obtained from Eq. (4.21) it is obvious that the $(k+1)$st element of $\tilde{\mathbf{Z}}_n$ is equal to the $(k+1)$st element of $\mathbf{Z}_{n-1}$; that is, $\tilde{\mathbf{Z}}_n(k+1) = Z_{n-1}(k+1)$. Thus the required difference is given by Eq. (4.46) where the vector **L** is defined by Eq. (4.25)

$$Z_n(k+1) - Z_{n-1}(k+1) = bL(k+1). \tag{4.46}$$

The $(k+1)$st component of $\mathbf{Z}_n$ is an approximation to $(h^kX^{(k)}/k!)$. Thus an approximation to $h_k{}^{+1}X^{(k+1)}$ is given by Eq. (4.47).

$$h^{k+1}X^{(k+1)} = k!bL(k+1). \tag{4.47}$$

Equation (4.48) results if Eq. (4.47) is substituted into Eq. (4.46) and the higher order error term is dropped.

$$\epsilon_T = \frac{L(k+1)k!b}{k+1}. \tag{4.48}$$

Truncation error is controlled by requiring that the inequality given by Expression (4.49) be satisfied at each step of the integration.

$$\epsilon^2 \geq \left(\frac{L(k+1)}{(k+1)\,XMAX}\right). \tag{4.49}$$

XMAX is the largest value that the dependent variable has taken on during the integration and ϵ is a parameter specified for the problem. If this criteria is not satisfied the step size is reduced until it is. If an integration variable has an initial value of zero this procedure must be modified.

The use of Nordsieck vectors facilitates the changing of step size. The vector $\mathbf{Z}_n$ defined by Eq. (4.19) represents information at step n with step size h. If it is desired to change to step size to αh, then each component of $\mathbf{Z}_n$ must be modified as shown in Eq. (4.50).

$$Z_n(i)|_{\alpha h} = \alpha^{i-1} Z_n(i)|_h. \tag{4.50}$$

Gear (1971b) proposed the use of Eqs. (4.51)–(4.53) to calculate the step size that will satisfy the truncation error criteria at the current order and orders one higher and lower where b_n is the value of b resulting from the solution of Eq. (4.11) at each time step.

$$\bar{\alpha}_{\text{DOWN}} = \frac{\left[\epsilon^2\left(\frac{(XMAX)(k)}{k!Z_n(k)}\right)^2\right]^{1/2k}}{1.3} \tag{4.51}$$

$$\bar{\alpha}_{\text{SAME}} = \frac{\left[\epsilon^2\left(\frac{(XMAX)(k+1)}{k!b_nL(k+1)}\right)^2\right]^{1/2(k+1)}}{1.2} \tag{4.52}$$

$$\bar{\alpha}_{\text{UP}} = \frac{\left[\epsilon^2\left(\frac{(XMAX)(k+2)}{k!(b_n - b_{n-1})L(k+1)}\right)^2\right]^{1/2(k+2)}}{1.4}. \tag{4.53}$$

The factors 1.2, 1.3, and 1.4 bias the method toward either not changing order or toward changing to a lower order. The logic in doing this is that changing step size requires work. However if it is determined to change step size, it is better to go to a lower order method, which requires slightly less work at each step. Stability considerations prevent changing step size at each step. Gear (1971b) provides criteria for making the decision to attempt a change in step size.

The procedures outlined for step size and order control provide a method to start the solution procedure. In the solution of initial value problems all that is required are the values of the dependent variables at the start of the integration interval. The order of the method is set to one and the second components of the various $\mathbf{Z}_0$ vectors are set to zero. The second component of the $\mathbf{Z}_0$ vectors are set to zero because for an arbitrary set of differential and algebraic equations it is not always possible to obtain values for all the required derivatives. This is no manner affects the accuracy of the solution as an examination of the method defined by Eq. (4.2) reveals. The only thing affected is the error control procedure, which must be suspended until the second step. Thus the initial value of h chosen should be small, but will be increased later by the integration routine. Similar considerations also require that tests to increase the order of the method be prohibited until the third time step has been completed. These problems do not occur when integrating pure systems of differential equations in state variable form.

Other strategies for step size and order can be devised such as using a subset of variables for which initial derivatives are available. After the required information is constructed the step size and order control can be based on all variables but to date computational experience indicates that it is best to base truncation error and step size control on the subset of variables that have a derivative in at least one equation of the differential-algebraic system being integrated.

NUMERICAL EXAMPLE

Gallun (1979) tested the stage model and proposed solution procedure by solving an extractive distillation problem. The problem involved separating acetone from methanol and ethanol with water as the extractive agent. The column contained 48 equilibrium stages plus a partial reboiler and total condenser for a total of 50 stages. Equations (3.1)–(3.7) formed the basis of the extractive distillation model. Additional differential and algebraic equations were required to describe the dynamics of the reboiler and condenser system. Since a primary justification for the development of dynamic models is control system evaluation, a control scheme was selected and modeled. The column and associated control scheme is shown in Fig. 2. Additional details of the reboiler and condenser system are given by Gallun (1979).

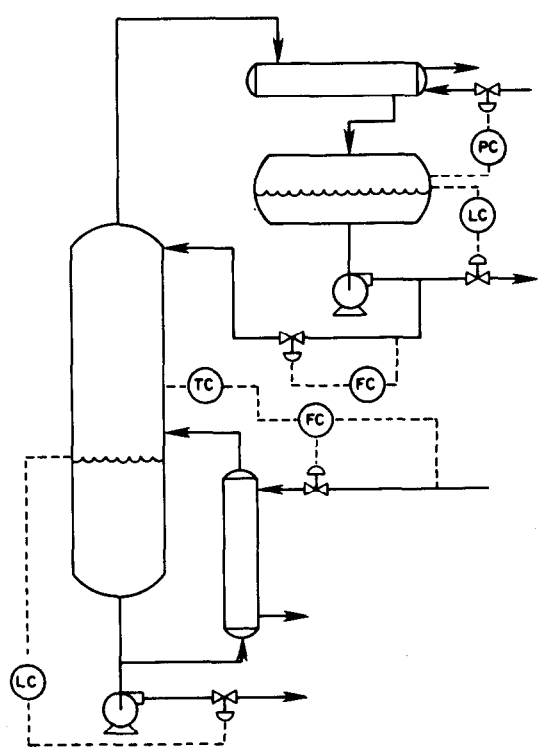

Fig. 2. Tower control system.

The complete column model, including the control system, required $N(c+4)+26$ algebraic equations and $N(c+1)+17$ differential equations for a total of $N(2c+5)+43$ equations. Thus for a column with fifty stages and four components, 693 differential and algebraic equations result. The large sparse Jacobian matrix generated from these equations was stored and factored using the techniques summarized by Holland (1981).

The hydraulic relationships required for the solution of Eqs. (3.3), (3.4) and (3.5) were calculated using sieve tray correlations given by Van Winkle (1976) and summarized in Appendix B. The various thermodynamic functions, required by Eq. (3.2), were calculated in a completely rigorous manner using procedures given by Prausnitz *et al.* (1967). The liquid phase enthalpies required by Eq. (3.7) were assumed to be functions of temperature only and evaluated using curve fits given by Gallun (1979). The vapor phase partial molar enthalpies required by Eq. (3.6) were evaluated using the concept of virtual values defined by Holland and Eubank (1974). The virtual value of the partial molar enthalpy has the property that it gives the correct enthalpy of a mixture when substituted for the partial molar enthalpy. The vapor phase virtual enthalpy is defined by Eq. (5.1) where H^0_{ji} is the enthalpy of pure compent i in the perfect gas state at T_j and Ω_j is the departure function per mole of vapor mixture at T_j and P_j from the ideal gas state. The functional dependence of Ω_j is given by Eq. (5.2)

$$\hat{H}_{ji} = H^0_{ji} + \Omega_j \tag{5.1}$$

$$\Omega_j = \Omega(T_j, P_j, \{v_{ji}\}). \tag{5.2}$$

The departure function, Ω, for the vapor phase was evaluated by use of the first two terms of the virial equation of state. The second virial coefficient was approximated as described by Prausnitz (1967) using the parameters given on page 213 of this monograph. The vapor pressures required to evaluate K_{ji} were calculated using the Antoine equation with the coefficients given by Gallun (1979). Activity coefficients for each component in the liquid phase were computed by use of the Wilson equation using the constants listed by Gallun (1979). The fugacity coefficients for the vapor phase were computed by use of Eqs. (3.10)–(3.12) of Chapter 3 and pages 143–144 of Appendix A of Prausnitz *et al.* (1967).

The temperature, pressure, level, and flow controllers shown in Fig. 2 were assumed to be ideal and thus described by Eq. (5.3) were c^{set} is the controller set point, c the measured variable, p the controller output, and p_0 the reference output of the controller.

$$p = K_c(c^{set} - c) + \int_0^t \frac{K_c}{\tau_I} (c^{set} - c)\mathrm{d}t + p_0. \tag{5.3}$$

Equation (5.3) can not be solved directly by techniques discussed in this paper but must be transformed into a pair of equations by introducing the variable, I, defined by Eq. (5.4). The resulting pair of equations used in the solution of the numerical example are given by Eqs. (5.5) and (5.6). Equation (5.5) results from differentiating Eq. (5.4) and rearanging. The variable, I, has intial value p_0. The introduction of the variable, I, and the expansion of Eq. (5.3) into two equations is analogous to the technique employed in reducing a high order differential equation to a set of first order equations.

$$I = p_0 + \int_0^t \frac{K_c}{\tau_I} (c^{set} - c)\mathrm{d}t \tag{5.4}$$

$$0 = \dot{I} - \frac{K_c}{\tau_I} (c^{set} - c) \tag{5.5}$$

$$0 = K_c(c^{set} - c) + I - p. \tag{5.6}$$

The temperature controller shown in Fig. 2 introduces a nonzero element into the lower triangular part of the Jacobian matrix. For a column without a controller using this temperature, this element would be zero. The nonzero element resulting from the use of the temperature controller was removed by applying Kubicek's algorithm (1976) for the factorization of the Jacobian matrix. A brief description of this algorithm follows. Let the original Jacobian $\mathbf{J}$ be rewritten as given by Eq. (5.7),

$$\mathbf{J} = \mathbf{A} + \mathbf{R} \tag{5.7}$$

where $\mathbf{R}$ contains the off-diagonal element resulting from the temperature controller. Then $\mathbf{R}$ may be rewritten as two vectors $\mathbf{R}_1$ and $\mathbf{R}_2{}^T$ and the expression for $\mathbf{J}$ becomes

$$\mathbf{J} = \mathbf{A} + \mathbf{R}_1\mathbf{R}_2{}^T. \tag{5.8}$$

Then the Newton–Raphson equations for the given time step under consideration take the form

$$\Delta\mathbf{x} = (\mathbf{A} + \mathbf{R}_1\mathbf{R}_2{}^T)^{-1}(-\mathbf{f}) \tag{5.9}$$

where $\Delta\mathbf{x}$ is the vector change in the variables such as $\mathbf{b}$ and $\mathbf{e}$ shown in Eqs. (4.43) and (4.44). For this case the Kubicek algorithm reduces to:

(1) Factor $\mathbf{A}$ to $\mathbf{LU}$
(2) Solve $\mathbf{Ay} = -\mathbf{f}$ and $\mathbf{Az} = \mathbf{R}_1$
(3) Calculate $a = 1 + \mathbf{R}_2{}^T\mathbf{z}$
(4) Calculate $w = \mathbf{R}_2{}^T\mathbf{y}$
(5) Calculate $\Delta\mathbf{x} = \mathbf{y} - (w/a)\mathbf{z}$.

This algorithm must be used carefully for even though $\mathbf{J}$ is nonsingular it is possible to define $\mathbf{R}_1$ and $\mathbf{R}_2$ such that $\mathbf{A}$ is singular. Gallun (1979) encountered this problem when solving the numerical example and proposed a simple modification to avoid the problem.

The column feeds for the numerical example are specified in Table 2 and the initial controller set points for the control scheme of Fig. 2 are given in Table 3. Selected values of column variables at the initial steady state are given in Table 4 and the integration parameters used in the solution of the problem are given in Table 5. The column temperature profile has local extrema as indicated in Table 4. This phenomenon is common in extractive distillation processes.

The example problem consisted of raising the temperature controller set point from 626.2261°R to 631.2261°R. Proper procedures were followed to account for the step change in the outputs of the temperature controller and the steam flow controller to which it is cascaded. It is not only theoretically correct but a practical necessity that the integration routine be started with $0+$ values as opposed to $0-$ values of the variables. This is a very important point as Gear's (1971b) error

Table 2. Feed forcing function initial steady state

	Component Feed Rates Moles/Minute				
Stage	Methanol	Acetone	Ethanol	Water	$F_j H_j$ Btu /Minute
3	0.0	0.0	0.0	5.0	6118.898
5	25.0	0.5	5.0	197.5	513543.3
21	65.0	25.0	5.0	5.0	146509.6
j=1,2,...,50 j≠3,5,21	0.0	0.0	0.0	0.0	0.0

Table 3. Initial steady state controller set points

Controller	Set Point in Physical Units
Overhead Receiver Pressure	760 mm Hg abs.
Reflux Flow Rate	490.135 gpm.
Overhead Receiver Level	3 ft.
Base Level	8 ft
Stage 35 Temperature	626.2261°R

Table 4. Initial steady state values of column variables

Stage	T Deg. R	P mm Hg. abs.	L moles/min.	$\sum_{i=1}^{c} v_{ji}$ moles/min.	$\sum_{i=1}^{c} u_{ji}$ moles	Z ft.	E Btu.x10^{-3}
1	594.37	760.00	58.12	—	281.29	3.00	831.28
2	598.32	787.09	56.09	81.37	19.71	0.33	58.54
5	626.84	797.59	257.50	72.39	71.39	0.54	186.83
10	633.06	820.52	258.01	72.91	72.27	0.52	196.78
15	635.60	842.98	258.36	73.29	72.77	0.51	200.32
20	633.23	865.01	260.70	74.18	73.80	0.58	198.39
25	623.00	891.57	367.15	82.01	84.37	1.08	222.18
30	624.63	918.93	367.82	82.68	84.48	1.08	225.42
35	626.22	946.16	368.46	83.33	84.59	1.08	228.58
40	627.80	973.28	369.08	83.96	84.69	1.09	231.67
45	629.90	1000.21	369.38	84.41	84.77	1.07	234.90
50	645.24	1025.55	285.00	82.18	3494.91	8.00	10236.91

Table 5.

Integration Parameters	
Error control parameter	0.01
Minimum permitted step size	0.005 Minute
Maximum permitted step size	5.00 Minute
Initial step size	0.03 Minute

control procedure will not function properly unless the discontinuities are accounted for. Gallun (1979) gives other examples of the need to account for step changes in integration variables.

The integration routine performance is given in Table 6 and the responses of selected variables are shown in Figs. 3 and 4. The variation in pressure shown in Fig. 4 is particularly interesting in that the models due to others reviewed in this paper assume constant stage pressures. Stagewise variation of column pressures can have an important effect when dealing with low pressure or vacuum columns. The integration procedure required about 170 sec of AMDAHL 470 V/6 execution time to obtain the dynamic response for a period of about 2 hr. The various programs were compiled using extended Fortran H.

Gallun (1979) solved another variation of this example problem involving both a feed change and a simultaneous temperature set point change. The techniques were also

Table 6. Integration routine performance

Step Number	t (Minutes)	Integration Order	Cumulative Function Evaluations	Cumulative Jacobian Evaluations
0	0.000	1	0	0
9	1.024	1	33	5
10	1.242	2	36	5
31	10.013	2	121	16
32	10.548	3	124	16
60	27.292	3	232	30
61	27.962	2	234	30
110	82.502	2	438	57
111	82.659	1	440	57
124	121.959	1	487	63

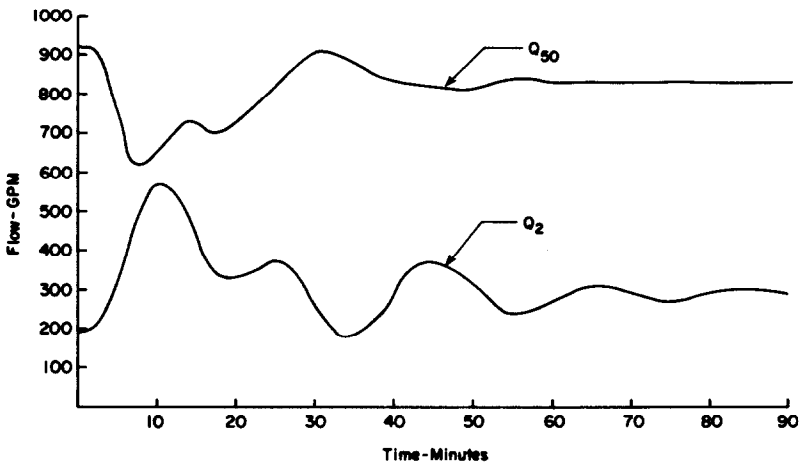

Fig. 3. Response of bottom (Q_{50}) and distillate (Q_2) total flow rates.

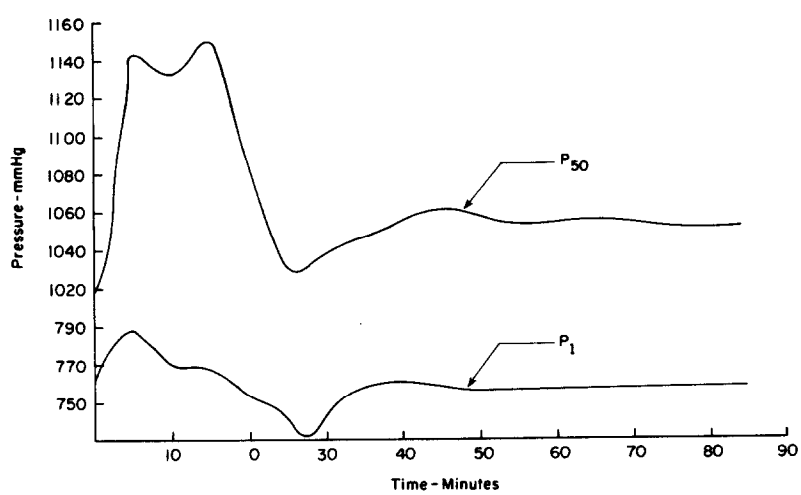

Fig. 4. Response of receiver pressure (P_1) and base pressure (P_{50}).

applied to unsteady state flash problems and distillation columns modeled under the assumption of constant stage molar holdup. All test problems were easily and efficiently solved.

DISCUSSION OF THE COMPLETE PROCEDURE

The stage model defined by Eqs. (3.1)–(3.7), when solved directly be the Gear integration procedure, is a powerful and flexible procedure. The thermodynamic and hydraulic functions appearing in the model equations can be obtained directly from subroutines that may already exist. This is possible because the model equations only require accurate evaluation of the function values not the partial derivatives of the functions with respect to the integration variables. Partial derivatives are only required as part of the Newton–Raphson procedure used to converge the nonlinear equations generated by Gear's procedure. Thus the various partials can be approximated, calculated numerically, or ignored without influencing the accuracy or stability of the integration procedure. The burden of calculating partial derivatives is further reduced because the Jacobian matrix is only evaluated when the convergence of Eqs. (4.43) and (4.44) becomes sluggish.

Gear's procedure for the simultaneous solution of differential and algebraic equations can also be applied for the solution of other basic stage models proposed in the literature. For example, the basic stage model proposed by Ballard *et al.* (1978) could be integrated directly without limiting the form of the thermodynamic or hydraulic functions and without undertaking the manipulations required to achieve a state variable formulation. The procedure described herein is not dependent on the particular stage model defined by Eqs. (3.1) (3.7) although these equations provide a model requiring minimal manipulation before integration. The procedure can also be easily extended to model processes where vapor phase holdup of material and energy must be considered.

The key idea advocated in the procedures presented above is to write the model equations as a system of differential and algebraic equations to be solved with minimal alteration or manipulation. The same idea can be applied when developing dynamic models of auxillary equipment such as reboilers and condensers. Gallun (1979) used these techniques in developing the reboiler and condenser models used in the numerical example.

It should also be noted that the basic method is not tied to the formulation of Gear's (1971c) procedure coded in DIFSUB but could be implemented with code derived from GEAR or EPISODE.

NOMENCLATURE

$A_{cd,j}$ cross sectional area of the downcomer of tray j, square feet
$A_{dc,j}$ clearance area between the downcomer of the jth tray and the floor of tray $j+1$, ft^2
$A_{n,j}$ nominal cross sectional area of the zone above the floor of tray j, ft^2
$A_{o,j}$ total hole area of tray j, ft^2
$A_{a,j}$ active area of tray j, ft^2
$\mathbf{A}$ dense portion of a Jacobian matrix
b variable used to correct the predicted value of the differential variable
b_n value of b at t_n
$\mathbf{b}$ vector of corrections
$\mathbf{B}$ predictor matrix
c total number of components. Also used to denote a controller input
c^{set} controller set point
$\mathbf{C}$ corrector coefficient vector
$C_{o,j}$ discharge coefficient for stage j used in the calculation of the dry hole pressure drop
$\mathbf{D}$ Pascal triangle matrix
e variable used to correct the predicted value of an algebraic variable
$\mathbf{e}$ vector of corrections
E_j energy function for stage j; defined by Eq. (3.7)
$\dot{E}_j$ dE_j/dt, time derivative of the energy function
$\mathbf{E}$ predictor matrix
$f(X, t)$ function of X and t; see Eqs. (2.1) and (4.1)
$\mathbf{f}$ vector of functions defined by Eqs. (4.41) or (4.43)
F_j total molar flow rate of the feed entering stage j
FC flow controller
$F_{f,j}$ stage j foam factor; defined by Eq. (B.6)
g function defined by Eq. (4.26)
$\mathbf{g}$ vector of functions defined by Eqs. 4.42 or 4.44
G function defined by Eq. (4.11)
h length of the time step used in integration procedure
$\hat{h}_{ji}$ virtual value of the partial molar enthalpy of component i in the liquid leaving stage j
$\hat{H}_{ji}$ virtual value of the partial molar enthalpy of component i in the vapor leaving stage j
$\hat{h}_j$ enthalpy per mole of liquid leaving stage j
$\hat{H}_j$ enthalpy per mole of vapor leaving stage j
$(\hat{h}_j)^n$ $\hat{h}_j$ at t_n
H_j enthalpy per mole of feed entering stage j
$h_{o,j}$ dry hole pressure drop of the vapor across the perforations of tray j, inches of equivalent vapor-free liquid
$h_{dc,j}$ head loss resulting from the flow of liquid under the downcomer of tray j to the floor of tray $j+1$, inches of vapor-free liquid
$h_{L,j}$ height of liquid on the plate j, inches of vapor-free liquid
$h_{ow,j}$ height of liquid over the weir of plate j, inches of frothy liquid
$h_{w,j}$ height of the outlet weir of stage j, inches
i integer used to count the number of components
I variable defined by Eq. (5.5)
$\dot{I}$ dI/dt, time derivative of I
j integer used as a subscript to indicate a variable or parameter depends on stage or tray number
k integer used to denote the order of Gear's method; also used as an integer for counting the number of components
K_c controller gain
K_{ji} ideal solution K value
l length of reactor
$l_{w,j}$ length of the outlet weir of tray j, in.
$\mathbf{L}$ vector used in Gear's method or lower triangular matrix
$L(k)$ kth element of $\mathbf{L}$
L_j total flow rate of the liquid leaving plate j
$\dot{L}_j$ dL_j/dt, time derivative of the total molar flow rate
L_j^n L_j at t_n
LC level controller
$\mathbf{M}$ vector used in Gear's method
n_i molar flow rate of component i
$O(h^{k+1})$ number of order of h^{k+1}
P_j pressure of stage j
PC pressure controller
p output of controller; p_0-reference output of the controller
Q_j flow rate of liquid leaving stage j, gal per min
$\mathbf{Q}$ transition matrix
q heat loss per unit length of reactor
$\mathbf{R}$ sparse portion of a Jacobian matrix
$\mathbf{R}_k$ vectors such that $\mathbf{R}_1 R_2^T = \mathbf{R}$
T_j temperature of stage j
$\mathbf{T}$ transition matrix
TC temperature controller
t time $j\,\Delta t$ = time step

$\mathbf{U}$ upper triangular matrix
U_j total molar holdup on stage j
$\dot{U}_j$ dU_j/dt, time derivative of U_j
u_{ji} molar holdup of component i on stage j
$\dot{u}_{ji}$ du_{ji}/dt, time derivative of u_{ji}
$u_{n,j}$ velocity of the vapor leaving stage j, ft per sec
$u_{o,j}$ velocity of the vapor through the performation on tray j, ft per sec
u_n value of a variable at time t_n
V_j total molar flow rate of the vapor leaving stage j
$\dot{V}_j$ dV_j/dt time derivative of V_j
V_j^n V_j at t_n
$\mathcal{V}_j$ volumetric holdup of liquid on stage j, cubic feet of clear liquid
v_{ji} molar flow rate of component i in the vapor leaving stage j
$\mathbf{W}_n$ vector of dependent variables
$\bar{\mathbf{W}}$ vector of predicted values of dependent variables
x_{ji} mole fraction of component i in the liquid leaving stage j
X integration variable defined by Eq. (2.1)
X_n value of X at t_n
$\dot{X}_n$ dX/dt evaluated at t_n
$X^{(k)}$ kth time derivative of X
X_{ji} mole fraction of component i in the feed entering on plate j
y_{ji} mole fraction of component i in the vapor leaving stage j
Z_j height of liquid in the downcomer of plate j, feet of vapor-free liquid
$Z_{T,j}$ distance between plate on stage j and $j+1$, in.
$\mathbf{Z}_n$ Nordsieck vector of the variables at time t_n
$Z_n(k)$ kth element of $\mathbf{Z}_n$
$\bar{\mathbf{Z}}_n$ Nordsieck vector of the predicted values of the variables at time t_n
α ratio of new step size to old
α_j jth parameter of Gear's corrector of order k
$\bar{\alpha}_j$ jth parameter of Gear's predictor of order k
γ_{ji}^V vapor phase activity coefficient of component i of stage j
γ_{ji}^L liquid phase activity coefficient of component i of stage j
β_0 parameter of Gear's corrector of order k
β_1 parameter of Gear's predictor of order k
ϵ_T truncation error
ϵ adjustable parameter in the expressions for changing step size and order
ζ units conversion constant
η_j a predictor coefficient for algebraic variables
ρ_j^L mass density of the liquid leaving stage j
ρ_j^V mass density of the vapor leaving stage j
$\bar{\rho}_j^L$ molar density of the liquid leaving stage j
$\bar{\rho}_j^V$ molar density of vapor leaving stage j
τ_I integral time constant
Ω departure function; defined by Eq. (5.2)

REFERENCES

1. R. Aris, *Introduction to the Analysis of Chemical Reactors.* Prentice-Hall, Englewood Cliffs, New Jersey (1965).
2. D. Ballard, C. Brosilow & C. Kahn, Dynamic simulation of multicomponent distillation column, Paper presented at *AIChE Meeting*, Oct. 1978.
3. G. D. Byrne, A. C. Hindmarsh, K. R. Jackson & H. G. Brown, A comparison of two ODE codes: GEAR and EPISODE. *Comput. Chem. Engng* **1**, 133 (1977).
4. L. O. Chua & P. Lin, *Computer-Aided Analysis of Electronic Circuits—Algorithms and Computational Technique.* Prentice-Hall, Englewood Cliffs, New Jersey (1975).
5. N. Doukas & W. L. Luyben, Control of sidestream columns separating ternary mixture. *Instrum. Tech.* **25**(6), 43 (1978).
6. S. E. Gallun, Solution procedures for nonideal equilibrium stage processes at steady and unsteady state described by algebraic or differential-algebraic equations. Dissertation, Texas A & M University, College Station, Texas (1979).
7. C. W. Gear, The numerical integration of ordinary differential equations. *Math. Comput,* **21**, 146 (1967).
8. C. W. Gear, The automatic integration of ordinary differential equations. *Commun., ACM* **14**(3), 176 (1971a).
9. C. W. Gear, *Numerical Initial Value Problems in Ordinary Differential Equations.* Prentice Hall, Englewood Cliffs, New Jersey (1971b).
10. C. W. Gear, Simultaneous solution of differential-algebraic equations. *IEEE Trans. Circuit Theory* **18**(1), 89 (1971c).
11. G. D. Hachtel, R. K. Brayton & F. G. Gustavson, The sparse tableau approach to network analysis and design. *IEEE Trans. Circuit Theory* **18**(1), 101 (1971).
12. P. Henrici, *Discrete Variable Methods in Ordinary Differential Equations.* Wiley, New York (1962).
13. C. D. Holland & P. T Eubank, Solve More Distillation Problems: Part 2—Partial Molar Enthalopies calculated. *Hydrocarbon Processing* **53**(11), 176 (1974).
14. C. D. Holland, *Fundamentals of Multicomponent Distillation.* McGraw-Hill, New York (1981).
15. M. Kubicek, V. Hlavacek & F. Prochaslca, Global modular Newton Raphson technique for simulation of an interconnected plant applied to complex rectifying columns. *Chem. Engng Sci.* **31**, 277 (1976).
16. M. L. Michelsen, Semi-implicit Runge-Kutta methods for stiff systems—programme descriptions and application examples. *Institutte for Kemiteknik* (1976a).
17. M. L. Michelsen, An efficient general purpose method for the integration of stiff ordinary differential equations. *AIChE J.* **22**, 594 (1976b).
18. A. Nordsieck, On the numerical integration of ordinary differential equations. *Math. Comput.* **16**, 22 (1962).
19. J. M. Prausnitz, C. A. Eckert, R. V. Orye & J. P. O'Connell, *Computer Calculations for Multicomponent Vapor-Liquid Equilibria.* Prentice-Hall, Englewood Cliffs, New Jersey (1967).
20. G. J. Prokopakis & W. D. Seider, Dynamic simulation of distillation towers. AIChE Annual Meeting, Chicago, Illinois. Nov. 1980.
21. R. P. Tewarson, *Sparse Matrices.* Academic Press, New York (1973).
22. L. S. Tung & T. F. Edgar, Development and reduction of a multivariable binary distillation column with tray hydraulics. AIChE National Meeting, Houston, Texas, April 1979.
23. M. Van Winkle, *Distillation.* McGraw-Hill, New York (1967).
24. A. W. Weimer & D. E. Clough, A critical evaluation of the semiimplicit Runge–Kutta methods for stiff systems. *AIChE J.* **25**, 730 (1979).

APPENDIX A

Is the introduction of E really necessary?

The stage enthalpy balance used in this paper is given by Eqs. (3.6) and (3.7). A natural question to ask is if it is really necessary to introduce Eq. (3.7) and the variable E_j? The answer is that a rigorous alternative is available that is totally compatible with Gear's stiff procedure, but it may not be desireable to use the alternative. Suppose E_j is eliminated and the energy balance written as in Eq. (A1). Since $\{u_{ji}\}$, T_j, and P_j are integration variables and $\hat{h}_{ji}$ is an explicit function of these variables the chain rule can be applied to the derivative in Eq. (A1) yielding

$$0 = F_jH_j + \sum_{i=1}^{c} (v_{j+1,i}\hat{H}_{j+1,i} - v_{ji}\hat{H}_{ji}) - \frac{L_j \sum_{i=1}^{c} u_{ji}\hat{h}_{ji}}{\sum_{i=1}^{c} u_{ji}} + \frac{L_{j-1} \sum_{i=1}^{c} u_{j-1,i}\hat{h}_{j-1,i}}{\sum_{i=1}^{c} u_{j-1,i}} - \frac{d}{dt}\left(\sum_{i=1}^{c} u_{ji}\hat{h}_{ji}\right) \quad \text{(A1)}$$

$$\frac{d}{dt}\left[\sum_{i=1}^{c} u_{ji}\hat{h}_{ji}\right] = \sum_{i=1}^{c}\left[\dot{u}_{ji}\hat{h}_{ji} + u_{ji}\left(\dot{T}_j\frac{\partial\hat{h}_{ji}}{\partial T_j} + \dot{P}_j\frac{\partial\hat{h}_{ji}}{\partial P_j}\right)\right] + \sum_{i=1}^{c} u_{ji}\left[\sum_{k=1}^{c}\frac{\partial\hat{h}_{ji}}{\partial u_{jk}}\dot{u}_{jk}\right) \quad \text{(A2)}$$

Although this formidable expression suggests that an approximation is in order, it may be simplified by use of relationships presented by Aris (1965) or by use of the following alternate approach.

Let $\hat{h}_j$ denote the enthalpy per mole of mixture. Then it follows by the definition of a homogeneous function that

$$\left(\sum_{i=1}^{c} u_{ji}\right)\hat{h}_j$$

is homogeneous of degree one. Consequently, application of Euler's theorem at constant temperature and pressure gives

$$\sum_{i=1}^{c} u_{ji}\hat{h}_{ji} = \left(\sum_{i=1}^{c} u_{ji}\right)\hat{h}_j \quad \text{(A3)}$$

where the partial molar enthalpy of component k is defined by

$$\frac{\partial\left[\left(\sum_{i=1}^{c} u_{ji}\right)\hat{h}_j\right]}{\partial u_{jk}}\Bigg|_{P,T,u_{ji,i\neq k}} = \hat{h}_{jk}. \quad \text{(A4)}$$

For convenience, let

$$f(\{u_{ji}\}, T, P) = \sum_{i=1}^{c} u_{ji}\hat{h}_{ji} \quad \text{(A5)}$$

Then by application of the chain rule

$$\frac{d\left(\sum_{i=1}^{c} u_{ji}\hat{h}_{ji}\right)}{dt} = \frac{\partial f}{\partial u_{ji}}\dot{u}_{j1} + \frac{\partial f}{\partial u_{j2}}\dot{u}_{j2} + \ldots + \frac{\partial f}{\partial u_{jc}}\dot{u}_{jc} + \frac{\partial f}{\partial T}\dot{T} + \frac{\partial f}{\partial P}\dot{P} \quad \text{(A6)}$$

From Eqs. (A.4), (A.5), and (A.5), it follows that

$$\frac{d\sum_{i=1}^{c} u_{ji}\hat{h}_{ji}}{dt} = \sum_{i=1}^{c}\hat{h}_{ji}\dot{u}_{ji} + \sum_{i=1}^{c} u_{ji}\left[\frac{\partial\hat{h}_{ji}}{\partial T}\dot{T} + \frac{\partial\hat{h}_{ji}}{\partial P}\dot{P}\right]. \quad \text{(A6)}$$

This same result was obtained by Aris (1965) in a slightly different manner. Then Eq. (A1) may be restated in the following form:

$$0 = F_jH_j + \sum_{i=1}^{c}(v_{j+1,i}\hat{H}_{j+1,i} - v_{ji}\hat{H}_{ji}) - \frac{L_j\sum_{i=1}^{c} u_{ji}\hat{h}_{ji}}{\sum_{i=1}^{c} u_{ji}} + L_{j-1}\frac{\sum_{i=1}^{c} u_{j-1,i}\hat{h}_{j-1,i}}{\sum_{i=1}^{c} u_{j-1,i}} - \sum_{i=1}^{c}\left(\dot{u}_{ji}\hat{h}_{ji} + u_{ji}\left(\dot{T}_j\frac{\partial\hat{h}_{ji}}{\partial T_j} + \dot{P}_j\frac{\partial\hat{h}_{ji}}{\partial P_j}\right)\right) \quad \text{(A7)}$$

Thus E_j can be eliminated and an energy balance equation consistent with Gear's procedure obtained. The new energy balance equation requires only partial derivatives of the partial molar enthalpies with respect ot temperature and pressure. The elimination of the variable E_j, and the reduction of the number of stage equations through the use of Eq. (A7) may offer advantages if the form of the enthalpy function is simple. The authors feel that the use of E_j does not introduce significant extra calculations and that Eqs. (3.6) and (3.7) should be retained. Another factor that favors the use of Eqs. (3.6) and (3.7) is that many thermodynamic packages are not set up to supply the partial derivatives required by Eq. (A7). Furthermore, when the new variable E_j is introduced, the enthapies in Eq. (3.7) may be replaced by the internal energies to give the correct form for the energy holdup term. However, the use of enthalpies instead of internal energies in Eq. (3.7) is both a good approximation and a convenient one.

The definition of the new variable E may be used to simplify differential equations for systems other than those for distillation columns. For example, a simple energy balance for a plug-flow reactor at steady state is given by Eq. (A8), where the independent variable is reactor length, l, and n_i is the molar flow rate of component i in the direction of increasing l. The quantity q, is the heat loss per unit length of the reactor, and is in general a function of various reactor variables. The expansion technique yields Eqs. (A9) and (A10). It should be noted that once the energy balance equations have been expanded, Michelsen's procedures (1976a, b) can also be applied if the appropriate partial derivatives are available. In order to correctly apply Michelsen's procedures, it is necessary to calculate second partials of the first partials appearing in Eq. (A7). It is doubtful that existing thermodynamic packages have this capability.

$$\frac{d\sum_{i=1}^{c} n_i\hat{h}_i}{dl} + q = 0 \quad \text{(A8)}$$

$$0 = E - \sum_{i=1}^{c} n_i\hat{h}_i \quad \text{(A9)}$$

$$0 = \frac{dE}{dl} + q \quad \text{(A10)}$$

APPENDIX B

Tray hydraulic functions

The correlations required to model the tray hydraulics of the example problem were based on the relationships presented by Van Winkle (1967). The head loss of liquid flowing under the downcomer of tray j onto the floor of tray $j+1$ is given by Eq. (B1). The volumetric flow of liquid flowing under the jth downcomer is given by Eq. (B2).

$$h_{dc,j} = 0.000003\left(\frac{Q_j}{A_{dc,j}}\right)^2 \quad \text{(B1)}$$

$$Q_j = \frac{7.48\,L_j}{\rho_j^{-L}}. \quad \text{(B2)}$$

The dry tray pressure drop is given by Eq. (B3) where the vapor velocity in the sieve tray perforations is calculated using Eq. (B4).

$$h_{o,j} = 0.186\left(\frac{u_{o,j}}{C_{o,j}}\right)^2\frac{\rho_{j+1}^{V}}{\rho_j^{L}} \quad \text{(B3)}$$

$$u_{o,j} = \frac{\sum_{i=1}^{c} v_{j+1,i}}{A_{o,j}\bar{\rho}_{j+1}^{V}60}. \quad \text{(B4)}$$

The height of aerated liquid over the outlet weir of tray j is given by Eq. (B5). The foam factor or aeration factor for tray j liquid is given by Eq. (B6) and is a function of the velocity of the vapor leaving the tray as defined by Eq. (B7). The equivalent height of clear liquid on tray j is given by Eq. (B8).

$$h_{0w,j} = 0.4896\left(\frac{Q_j}{l_{w,j}}\right)^{2/3} \quad \text{(B5)}$$

$$F_{f,j} = 1.0 - 0.372192\,(u_{n,j}(\rho_j^{V})^{1/2})^{0.177709} \quad \text{(B6)}$$

$$u_{n,j} = \frac{\sum_{i=1}^{c} v_{j,i}}{A_{n,j}\rho_j^{-V}60} \tag{B7}$$

$$h_{L,j} = F_{f,j}(h_{ow,j} + h_{w,j}) \tag{B8}$$

The volumetric holdup of liquid on stage j is defined to be the sum of the equivalent clear liquid on the tray floor plus the liquid contained in the downcomer. Equation (B9) defines this relationship.

$$\mathcal{V}_j = \frac{h_{L,j}A_{a,j}}{12} + Z_jA_{cd,j}. \tag{B9}$$